Boletim da Sociedade Astronômica Brasileira, **30**, no. 1, 200-204

The BINGO Telescope: a new 21 cm window for exploring the Dark Universe and other astrophysics

C.A. Wuensche[1] on behalf of BINGO collaboration

[1] Divisão de Astrofísica, Instituto Nacional de Pesquisas Espaciais, São José dos Campos, SP, Brazil
e-mail: ca.wuensche@inpe.br

Abstract. BAO (Baryon Acoustic Oscillations) are arguably one of the best probes to explore the young Universe and can contribute critically to the understanding of the Dark Energy properties. BINGO is a radio telescope designed to make the first BAO measurement in the radio waveband (~ 1 GHz) and is currently being constructed by a consortium including Brazil, United Kingdom, Switzerland, Uruguay and China. It will use a technique known as Intensity Mapping, measuring the 21 cm Hydrogen hyperfine transition for that. BINGO will operate in the frequency range 0.96 – 1.26 GHz, which corresponds to a redshift range z = 0.13 – 0.48, targeting an epoch where dark energy started dominating the Universe dynamics. It will be built in a low-intensity RFI site in Paraíba, Brazil, and its innovative design contains no moving parts and careful combination of two 40 m dishes, a focal plane containing 50 horns and receivers operating at total system noise temperature of ~ 50 K. Such a design intends to achieve competitive results through an excellent polarization performance and very low sidelobe levels required for intensity mapping. Receiver and horn prototypes, as well as dishes and structure structure, are either under fabrication or executive design and construction in Brazil. The beginning of operation is scheduled for the second semester of 2019.

Resumo. BAO (do inglês, Baryon Acoustic Oscillations) são uma das melhores sondas para explorar o jovem Universo e podem contribuir criticamente para a compreensão das propriedades da Energia Escura. O BINGO é um radio telescópio projetado por um consórcio, incluindo Brasil, Reino Unido, Suíça, Uruguai e China, para fazer a primeira medição de BAO na faixa de rádio (~ 1 GHz). Ele usará uma técnica conhecida como Mapeamento de Intensidade para medir a transição de 21 cm do hidrogênio. O BINGO funcionará na faixa de frequência de 0,96 – 1,26 GHz, correspondente ao intervalo de *redshift* z = 0,13 – 0,48, quando a energia escura já domina a dinâmica do Universo. O BINGO será construído em um sítio com baixo nível de radiointerferência na Paraíba, nordeste do Brasil, e deve obter resultados competitivos através de um projeto inovador, sem partes móveis, com duas parábolas de 40 m, um plano focal contendo 50 cornetas e receptores que funcionam em uma temperatura de ruído de ~ 50 K. Esse projeto proporcionará um excelente desempenho de polarização e os níveis de contaminação nos lóbulos laterais necessários para o mapeamento de intensidade. A responsabilidade de fabricaçã dos receptores, cornetas, parábolas e a construção da estrutura é da parte brasileira. O início de operação está previsto para o segundo semestre de 2019.

Keywords. Cosmological parameters – Baryon Acoustic Oscillations

1. Introduction

One of the main cosmological challenges in the 21st century is the explanation of the cosmic acceleration, first unequivocally inferred in 1998 by two independent groups measuring supernovae of type I (Perlmutter et al., 1998; Riess et al., 1998). In combination with other observations, such as the Cosmic Microwave Background (CMB), there is little doubt about the existence of such a component and the main focus of observational cosmology is now to try to determine its detailed properties. Among the various programs to measure those properties, the study of Baryonic Acoustic Oscillations (BAO) is recognized as one of the most powerful probes of the properties of dark energy (e.g. Albrecht et al. 2006). The radio band provides a unique and complementary observational window for the understanding of dark energy via the redshifted 21 cm neutral hydrogen emission line from distant galaxies.

BAOs are a signature in the matter distribution from the recombination epoch (see Fig. 1). Note that BAO show up in the distribution of galaxies at redshifts less than that of the epoch of reionization ($z \lesssim 5$). In the context of the standard cosmological model, the so-called ΛCDM model, BAOs manifest themselves as a small but detectable excess of galaxies with separations of order of 150 Mpc.h^{-1} This excess is the imprint of the acoustic oscillations generated during CMB times and its linear scale is known from basic physics. Consequently, a measure of its angular scale can be used to determine the distance up to a given redshift.

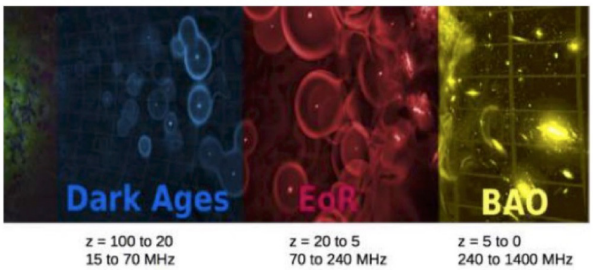

Figure 1. Late history of the Universe and the radio frequency of observation of the 21 cm line. The BAO epoch, well after reionization, will be the target of the BINGO telescope. In this epoch dark energy is dominating the expansion of the universe and it is possible to probe it.

The BINGO (**B**AO **I**n **N**eutral **G**as **O**bservations) telescope is a proposed new instrument designed specifically for observing such a signal and to provide a new insight into the Universe at $z \lesssim 0.5$ with a dedicated instrument. The optical project consists of a compact, two 40-m diameter, static dishes with an exceptionally wide field-of-view (15 deg.) and very sensitive op-

tics. The chosen technique for BAO observations is known as Intensity Mapping (e.g., Peterson et al. 2006). The main scientific goal for BINGO is to claim the first BAO detection in the radio band, mapping the 3D distribution of HI, yielding a fundamental contribution to the study of dark energy, with observations spanning several years.

The BINGO consortium is composed by Universidade de São Paulo and Instituto Nacional de Pesquisas Espaciais (Brazil), University of Manchester and University College London (United Kingdom), ETH Zürich (Switzerland) and Universidad de La República (Uruguay). An earlier version of the BINGO telescope concept is described in a paper by R. Battye and collaborators (Battye et al., 2013) and a comprehensive analysis of foregrounds and 1/f noise that can limit the BINGO performance was published by A. Bigot-Sazy and collaborators (Bigot-Sazy et al., 2015).

The structure of this paper includes this Introduction, followed by a description of the science motivation in Section 2. Section 3 will briefly describe BINGO design. The current status of the project will be summarized in Section 4, and will be followed by the Concluding Remarks, in Section 5

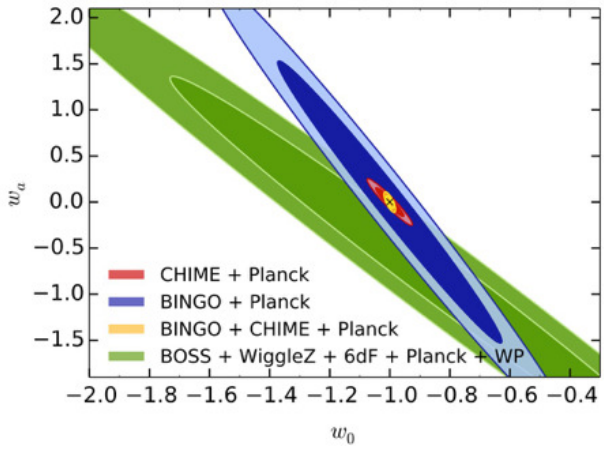

Figure 2. Constraints on Dark Energy equation of state, including forecasts from CHIME and BINGO. Note the tight error elipse obtained with combined radio data (BAO from CHIME and BINGO + Planck).

2. The science

Constraints on various existing dark energy models (see, e.g., Wang et al. 2005, 2007; Feng et al. 2008; Micheletti, Abdalla & Wang 2009; He et al. 2009; Abdalla et al. 2010; He et al. 2011) coming from BAO, such as those performed by Eisenstein and collaborators and Costa and collaborators (Eisenstein, 2005; Anderson et al., 2014) since BAOs provide precision distance measurements up to high redshifts ($z \gtrsim 1$). These will allow the degeneracies between cosmological parameters inferred from the cosmic microwave background to be broken, constraining most extensions to the standard cosmological model which are usually degenerate with the Hubble constant.

Measurements of the distribution of galaxies using observations in the radio region of the electromagnetic spectrum are based on the physics of the 21 cm (HI) line, which is a fundamental product of neutral hydrogen. HI redshift data allow us to construct a unique three dimensional map of the mass distribution, providing a different view when compared to the maps obtained with optical telescopes.

BAO measurements can be used to calculate the likelihoods for cosmological parameters given different cosmological input data. Fig. 2 shows the joint constraints for the equation-of-state of the dark energy with w_0 and w_a (1st time derivative of w_0) given for various data sets. The constraints were computed using the Fisher Matrix code described in Bull et al. (2015). It clearly shows the improvement obtained with the combination of the intensity mapping experiments BINGO and CHIME (Newburgh et al., 2014), compared to the current constraints given by the combination of the results of the CMB experiments Planck (Ade et al., 2014, 2016) and WMAP (polarizations; Bennett et al. 2013), with the optical galaxy surveys (BOSS; Anderson et al. 2013; Tojeiro et al. 2014), WiggleZ (Kazin et al., 2014) and 6dF (Beutler et al., 2011).

Furthermore, tight constraints can be made with radio data alone (BAO plus Planck), providing a completely independent measurement from optical surveys. The improvement in going from the red to yellow contours is due to having two independent measurements at different redshifts, showing the importance of BINGO. We have made estimates of the projected errors of the dark energy parameters assuming that all the other cosmological parameters are fixed. For constant w, the measurement would lead to an accuracy on w of $\lesssim$ 8% with BINGO experiment alone, including different types of foregrounds (Olivari et al., 2017). BINGO will be competitive with and complementary to optical surveys, which will likely be limited by different systematic errors.

2.1. HI intensity mapping

The standard approach to probing Large Scale Structure (LSS) is to perform a large redshift survey, to measure positions and redshifts of a large number of galaxies and use them to infer their density contrasts, using galaxies as tracers of the underlying total matter distribution. The natural tracer at radio wavelengths is the 21 cm line of neutral hydrogen, but the volume emissivity associated with this line is low, meaning that detecting individual galaxies at $z \sim 1$ requires a very substantial collecting area.

A number of approaches have been proposed to conduct intensity mapping surveys using an interferometer array rather than a single dish (see, for instance, Baker et al. 2011; Pober et al. 2012; van Bemmel et al. 2012). This approach can have a number of advantages, but it also requires complicated, and hence expensive, electronics to make the correlations. Using a single moderate sized telescope with an ultra stable receiver system is the lowest cost approach to intensity mapping measurements of BAO at $z \lesssim 0.5$ (see, e.g., Battye et al. 2013). BINGO will be the first telescope in the world operating in its frequency range whose goal is to study BAO with 21 cm intensity mapping. Its innovative idea is to use a telescope with broad beam operating at low frequencies to carry out intensity mapping (Peterson et al., 2006; Loeb et al., 2008; Masui et al., 2013; Battye et al., 2013) and hence measure the overall integrated HI brightness temperature of a very large number of galaxies, used together as a LSS tracer.

The main difficulty is that the HI signal is typically $\sim 100\,\mu$K whereas the foreground continuum emission from the Galaxy is $\sim$ 1 K with spatial fluctuations $\sim$ 100 mK. Fortunately, the integrated 21 cm emission exhibits characteristic variations as a function of frequency whereas the continuum emission has a very smooth spectrum. While there is a clear-cut statistical signature that allows for the two signals to be separated, the instrument used to distinguish the HI contribution from the foregrounds will need to be carefully designed in particular to avoid systematic effects that can result in leakage of the continuum background into the HI signal.

3. The instrument

Detecting signals of $\sim 100\,\mu K$ with a receiver of standard performance implies that every pixel in our intensity map requires an accumulated integration time larger than 1 day over the course of the observing campaign, which is expected to last at least 3 – 4 years. The total integration time can be built up by many returns to the same patch of sky but between these returns the receiver gains need to be highly alike and achieving this stability is a major design concern. The relative strength of the foreground, which is partially linearly polarized and concentrated towards the Galactic plane, means that the observations need to be made with a clean beam with low sidelobe levels and very good polarization purity. The general concept for the BINGO instrument is described in Battye et al. (2013) and updated in Battye et al. (2016).

A declination strip of $\sim 15°$, centered at $\delta \sim -15°$ aims at minimizing the Galactic foreground contamination and will be the optimal choice for the BINGO survey. The need to clearly resolve structures of angular sizes corresponding to a linear scale of around 150 Mpc at BINGO's chosen redshift range implies that the required angular resolution has to be $\sim 0°.75$.

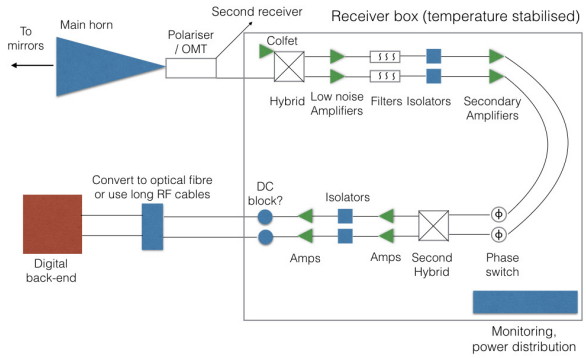

Figure 3. A block diagram of the main components of the BINGO correlation receiver. The correlation is achieved by means of the hybrids, which in this case will be waveguide magic tees. It is expected the low noise amplifiers will achieve a system temperature of $\lesssim 50\ K$.

3.1. The optics

The current optical design consists of two compact parabolic mirrors, with $\sim$ 40 m diameter, which gives a wider field-of-view (15°), lower sidelobe levels and improved polarization performance. The configuration under investigation considers a primary dish slightly tilted in relationship to the ground, while the second will hang from a vertical structure, iluminating uniformly the horn array. Since the mean wavelength of operation is 0.3 m, the surface profile of the telescope mirrors should have an *rms* error $\lesssim$ 15 mm to achieve maximum efficiency.

The gain of the telescope beams associated with the feedhorns at the edge of the array are less than 1 dB lower compared with those from the feedhorns at the centre and the edge beams are almost circular. The number of feedhorns in the array could in principle be more than 100, but the project will use 50 horns, completely covering a 15° strip of the sky every 24 hours

The guiding principle in the design of BINGO is to have components as simple as possible to minimize costs. Moreover, since there will be no moving parts, design, operation and instrument modeling will also be simpler than doing the same tasks for a conventional telescope. Another key advantage of a simple design is that it can be built quickly, allowing for results within a competitive science time window.

3.2. Receivers and feedhorns

Each receiver chain contains a correlation system, as shown in fig. 3, operating with uncooled amplifiers. The ambient temperature receivers will have a total system noise temperature of $\lesssim 50$ K and will operate in the frequency range 0.96 – 1.26 GHz. This corresponds to a redshift range of $z = 0.13 - 0.48$, long after the reionization era. After a year of observation BINGO should achieve a one degree pixel noise of 60 μK in a single 1 MHz frequency channel. The current plan is to use uncooled amplifiers because of their relatively good performance at these low frequencies and relatively low cost. The sky background and spillover will contribute up to 10 K and thus a cryogenically cooled receiver would give only a modest improvement in noise but with much more cost and complication. An additional benefit of receivers operating at ambient temperature is low maintenance given that cryogenics require constant attention that would be expensive to provide in a remote site.

BINGO will use specially designed conical corrugated feedhorns to illuminate the secondary mirror of the telescope. These need to be corrugated in order to provide the required low sidelobes coupled with very good polarization performance. Because of the large focal ratio needed to provide the required wide field of view, the feedhorns must be large with $\sim$ 1.7 m in diameter and $\sim$ 4.9 m in length. Their electromagnetic design is well understood and the challenge is to manufacture them at low cost and to minimize their weight due to the uncommon size. The mechanical project was done in Brazil. It consists of "4-like" profiles which will be curved into 127 circular sections, assembled together to make the horns. Also, it will receive an external layer of foam to ensure a better thermal stability during operation. A prototype is currently under construction and should be delivered by early January 2018. Details of the horns can be found in Fig. 4.

3.3. Site selection

The requirements for the telescope site are the following: a) a low Radio Frequency Interference (RFI) environment, distant for large cities or windmills; b) a topography that can easily support the two mirror design; c) easy access for researchers and technical staff; d) no planning/environmental restrictions on building a telescope structure; and e) a clear view of the South Galactic Pole for the reference feedhorns, in practice meaning a latitude south of $\sim 30°$. Recently, requirement e) was abandoned mostly due to budget constraints.

Uruguay was originally considered to host the telescope, and two cities were investigated: Minas de Corrales and Arerunguá. Budget concerns led to another site selection campaign in Brazilian areas. After a few months of procurement, including two regional centers of INPE, two sites were found in the west of Paraíba, a state located in the northeastern part of Brazil. Besides being very clean in terms of RFI, the local topography and support from a federal university with several campii spread around the western area of the state, made them the preferable sites. The construction is planned to start in early 2018. RFI measurements taken in Vão do Gato and Serra do Urubu (both in Paraíba) and

FIGURE 4. Top: Horn blueprint, with details on the corrugation. Center: Horn front view, green rings are machined and contain sockets for suspension rings. Bottow: Throat of the horn already assembled and coated with alodyne.

airplane routes covering the state of Paraíba, with the twot dot indicating the nominal sites marked are shown in Fig. 5.

4. Current status

BINGO systems are under planning or construction since July 2017. Horns are being fabricated and prototypes should be tested at the Laboratory of Integration and Tests of satellites (LIT), at INPE, starting mid January 2018. Transitions, polarimeters, magic tees and the receiver are already designed; fabrication of receivers and transitions should start at the end of 2017, subject to details of importation of components. Testing of amplifiers and other receiver components, as well as the initial steps of receiver assembly have already started at INPE.

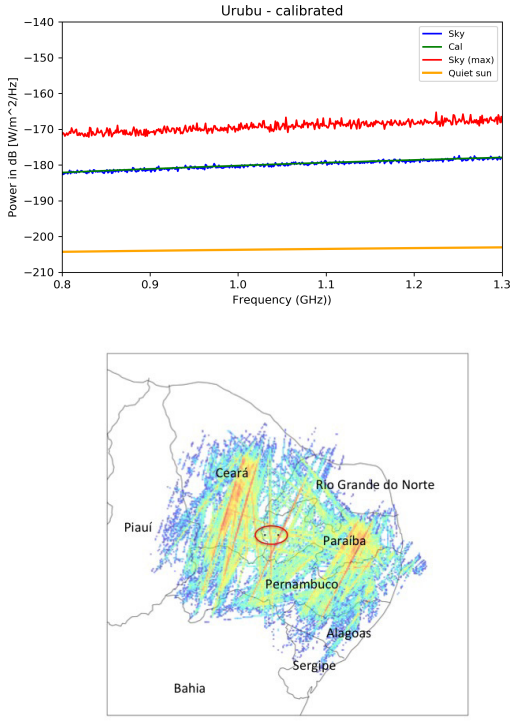

FIGURE 5. Top: RFI calibrated measurements in Serra do Urubu (right). Note the absence of any clear RFI signal. Bottom: Heat map of airplane routes covering the potential BINGO sites. Best sites are the two black dots in the center. The data runs from August 22 to September 15, 2017.

The current available funding is about US$ 3.0 million, dedicated to the construction of the telescope. Total cost of BINGO is estimated to be around US$ 4.2 million, the difference of US$ 1.2 million being for site preparation and structure construction. Current BINGO's competitors are FAST (Five-hundred-meter Aperture Spherical Telescope; FAST 2017) and CHIME (Canadian Hydrogen Intensity Mapping Experiment; CHIME 2017).

FAST main scientific goals involve hydrogen intensity mapping, fast radio bursts, pulsar timing, detection of interstellar molecules and interstellar communication signals. Midia references state that FAST will not be fully operational before late 2019, with three years needed to calibrate the various instruments. Once it is, it will likely require hundreds of radio astronomers. Problems with RFI produced by local tourists' visitation and also by its own actuators are current issues that may prevent FAST to operate at full capacity for a longer time.

Chime will also pursue the same major scientific goals as BINGO and FAST. Alike BINGO, it will have no moving parts but, instead of conventional mirrors and horns, it is based upon 20-m $\times$ 100-m long cylindrical mirrors and phased array beams. In addition to BAO and fast radio bursts, CHIME may also contribute to gravitational waves studies. It has entered operation in September 2017 and is able to monitor about 50% of the sky per observing day.

Fig. 6 shows the redshift space mapped by BINGO, FAST and CHIME, superimposed with current optical surveys.

5. Final remarks

BINGO is an innovative project to measure BAOs in the redshift interval $0.12 \leq z \leq 0.48$, at radio wavelenghts. The mea-

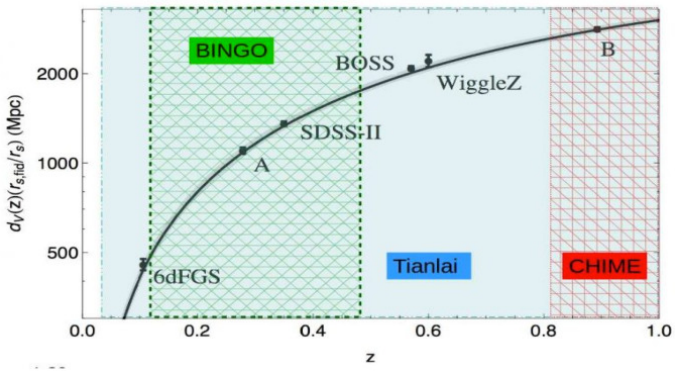

FIGURE 6. A version of the Hubble diagram including BINGO, FAST and CHIME, as well as other optical surveys such as SDSS, 6dFGS, BOSS and WiggleZ. Note the complementary coverage in redshift between BINGO and CHIME. Tianlai (FAST) will encompass both surveys from BINGO and CHIME.

sured signal is produced by the redshifted 21 cm line from neutral hydrogen, through a technique known as intensity mapping. BINGO will provide independent cosmological data and will probe the same redshift interval as the most important optical BAO surveys, but with different systematics. It is currently being constructed in Brazil, and will located in Paraíba, Northeastern Brazil, with the local support of the Universidade Federal de Campina Grande.

Scheduled to operate for at least 4 years, BINGO will provide high quality data, covering a wide range of scientific areas from Cosmology to Galactic science. With an upgrade to the digital backend, BINGO may also be able to detect a number of Fast Radio Bursts (FRBs) of which only ~ three dozens have been currently detected so far and whose origin is unknown.

The Bingo Collaboration can be found at http://www.bingo.telescope.org.

Acknowledgements. C.A.W. acknowledges a CNPq Grant 313.597/2014-6.

References

Abdalla, E., Abramo L. R. & de Souza, J. C. C. 1010, Phys. Rev. D, 82, 023508
Ade, P. et al. 2014, Planck Collaboration, A&A, 571, A16
Ade, P. et al. 2016, Planck Collaboration, A&A, 594, A13
Albrecht, A. et al. 2006, DETF report, astro-ph/0609591
Anderson, L., Aubourg, E., Bailey, S., et al. 2013, MNRAS, 427, 3435
Anderson, L., Aubourg, E., Bailey, S., et al. 2014, MNRAS, 441, 24
Baker, T., Ferreira, P. G., Skordis, C. & Zuntz, J. 2011, Phys. Rev. D, 84, 124018
Battye, R. A., Browne, I. W. A., Dickinson, C., et al. 2013, MNRAS, 434, 1239
Battye, R. et al. 2016, Proceedings of Recontres de Moriond, La Thuille, arXiv/1610.06826
Bennett, C. L. et al. 2013, WMAP Collaboration, ApJSS, 208, 20
Beutler, F., Blake, C., Colless, M. et al. 2011, MNRAS, 416, 3017
Bigot-Sazy, M.-A. et al. 2015, MNRAS, 454, 3240
Bull, P., et al. 2015, ApJ, 803, id. 21
Eisenstein, D. J. 2005, New Astronomy Reviews, 49, 7
Feng, C., Wang, B., Abdalla, E. and Su, R. K. 2008, Phys. Lett. B 665, 111
He, J. H., Wang, B. and Abdalla, E. 2009, Phys. Lett. B, 671, 139
He, J. H., Wang, B. and Abdalla, E. 2011, Phys. Rev. D, 83, id. 063515
Kazin, E. A., Koda, J., Blake, C., et al. 2014, MNRAS 441, 3524
Loeb, A., & Wyithe, S. 2008, Phys. Rev. Lett. 100, 161301
Masui, K. W., Switzer, E. R., Banavar, N. et al. 2013, MNRAS, 434, 46
Micheletti, S., Abdalla, E., & Wang, B. 2009, Phys. Rev. D, 79, id. 123506
Newburgh, L. B., et al., 2014, CHIME Collaboration, Proc. SPIE, Vol 9145, id. 91454V
Olivari, L. et al., MNRAS, submitted (Aug 2017)
Perlmutter, S. et al. 1998, Supernova Cosmology Project Collaboration, Nature 391, 51
Peterson, J. B., Bandura, K. & Pen, U. L. 2006, Moriond Cosmology Proceedings, astro-ph/0606104
Pober, J. C., Parsons, A. R., DeBoer, D. R., et al. 2012, AJ, 145, id. 65
Riess, A. G., et al. 1998, Supernova Search Team Collaboration, AJ, 116, 1009
The FAST Telescope. URL:htp://fast.bao.ac.cn/en/FAST.html. Accessed: September 09, 2017
The CHIME telescope. URL:htp://chime-experiment.ca/. Accessed: September 09, 2017
Tojeiro, R., Ross, A. J., Burden, A., et al. 2014, MNRAS, 440, 2222
van Bemmel, I.M., van Ardenne, A., de Vaate, J. G. B., et al. 2012, Proceedings of the meeting "Resolving The Sky - Radio Interferometry: Past, Present and Future", arXiv/1208.6180
Wang, B., Gong, Y. G., Abdalla, E. 2005, Phys. Lett. B, 624, 141
Wang, B., Zang, J., Lin, C. Y., Abdalla, E., Micheletti, S. 2007, Nucl. Phys. B, 778, 69